MATERIAL:

GRAY CAST IRON TO ASTM A48 CL. 30B

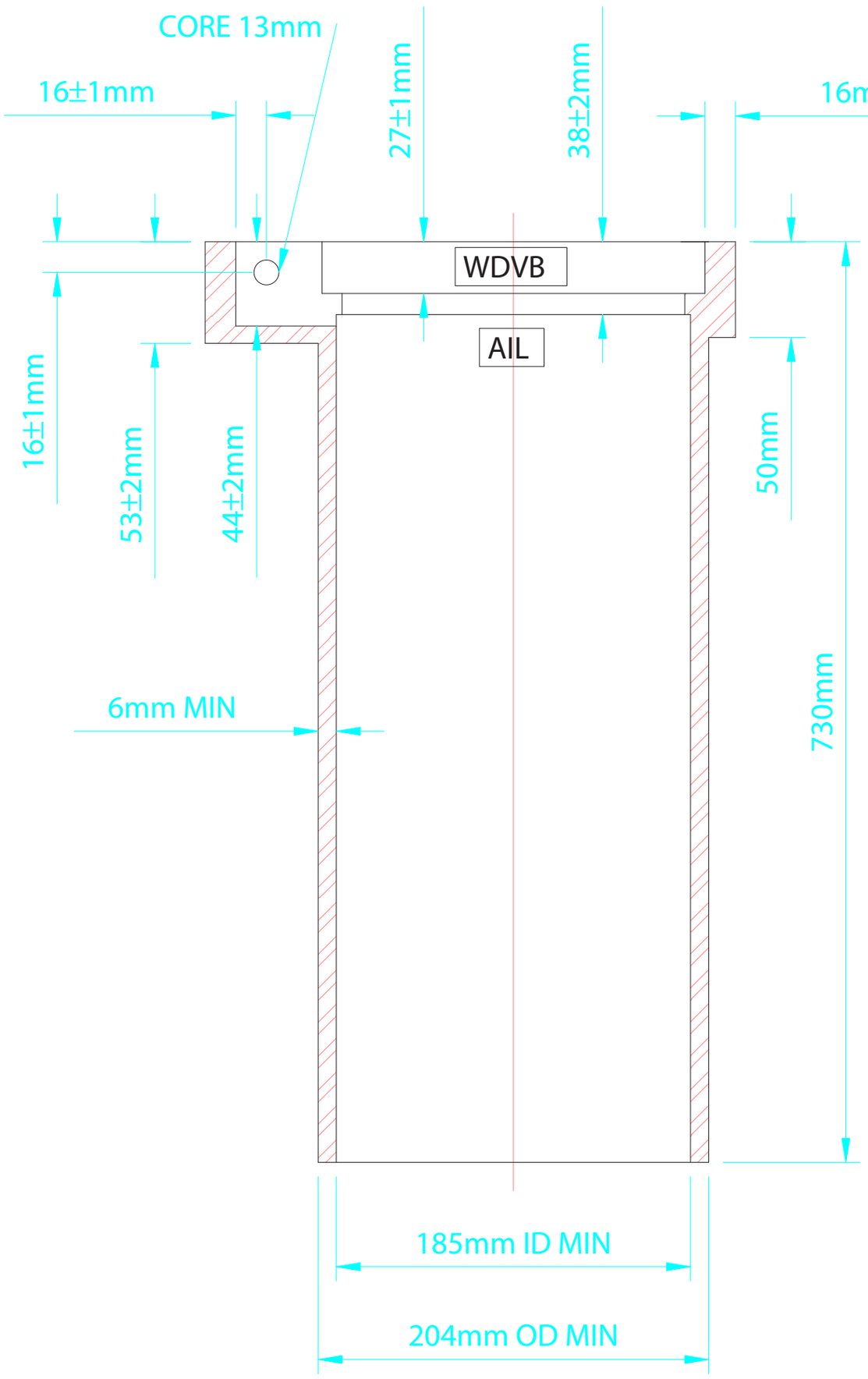

SECTION A-A

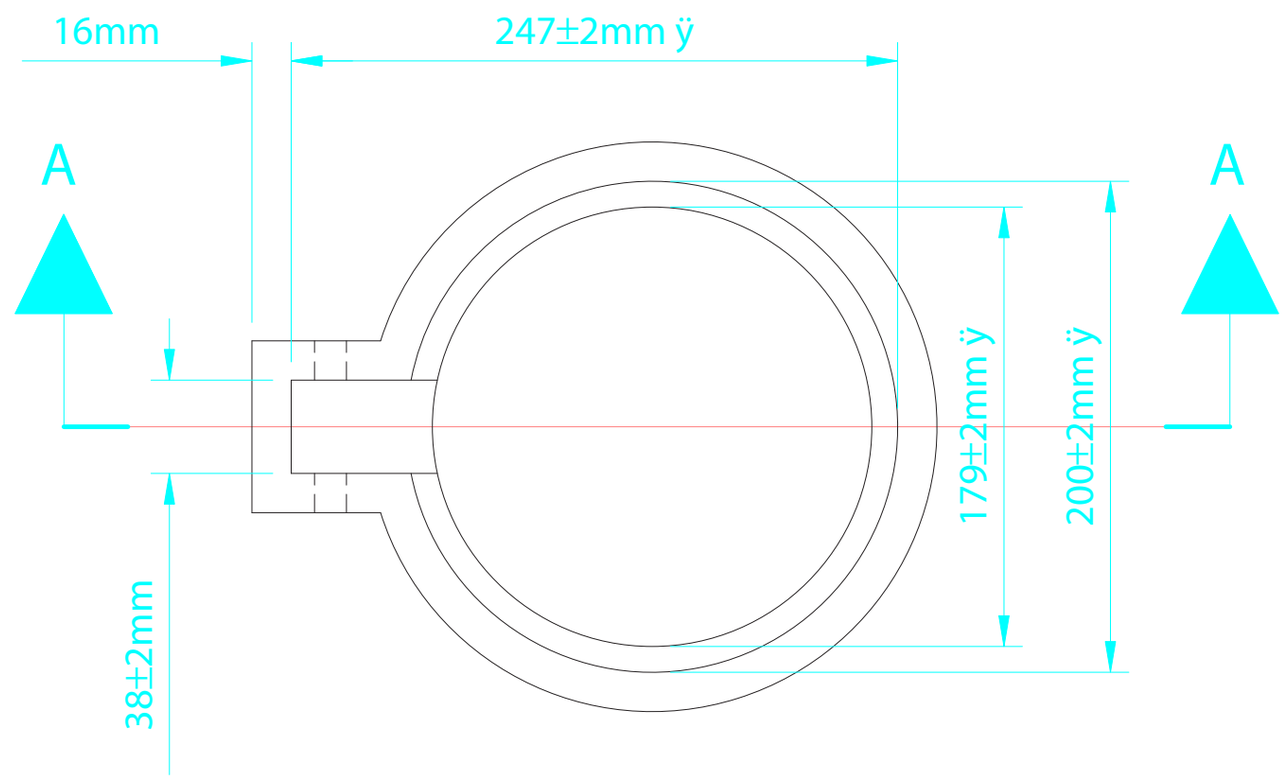

PLAN

WD46 OPPOSITE SIDE TO WDVB

LETTERS RECESSED AND RAISED

WD46 CAST VALVE BOX CASING

Valve Boxes Ltd.
1036 Waverley Street
Winnipeg Manitoba Canada R3T 0P3
P 204 896 1333 F 204 896 6969

APP'D BY:	DATE:
WDP	08/06/02
SCALE: N.T.S.	REV. NO: 00
DWG. NO: VBP-10	